Urba

96269893 <URBA L 84L70 730 NR BP CL2 L60D ANT

Urba

A large size LED urban street lighting lantern with 84 LEDs driven at 700mA with Narrow Road optic. Electronic, fixed output control gear. Class II electrical, IP66, IK08. Body: die-cast aluminium, textured dark grey. Cover: tempered flat glass. Side entry mounting to Ø60mm spigot with adjustable tilt angles of 0°, -5°, -10°. Integral power reduction function which dims down to 50% power, effective 3 hours before and 5 hours after a calculated midnight. Complete with 3000K LED.

Dimensions: 1065 x 400 x 176 mm
Luminaire input power: 178 W
Weight: 17 kg
Scx: m²

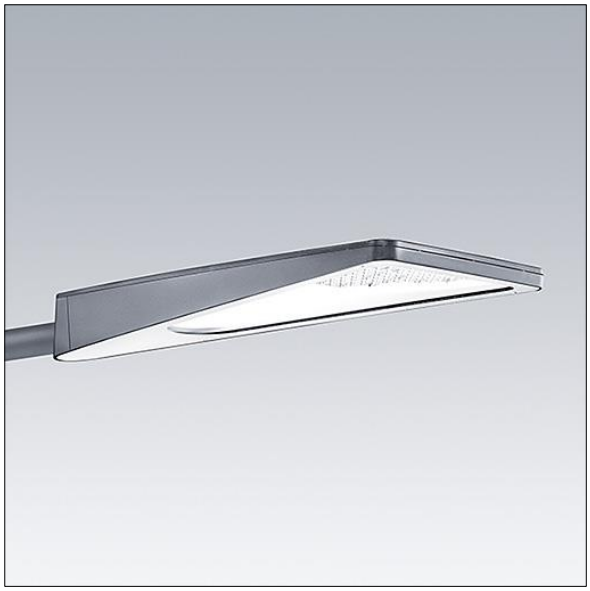

TLG_URBA_F_LMLEGYPDB.jpg

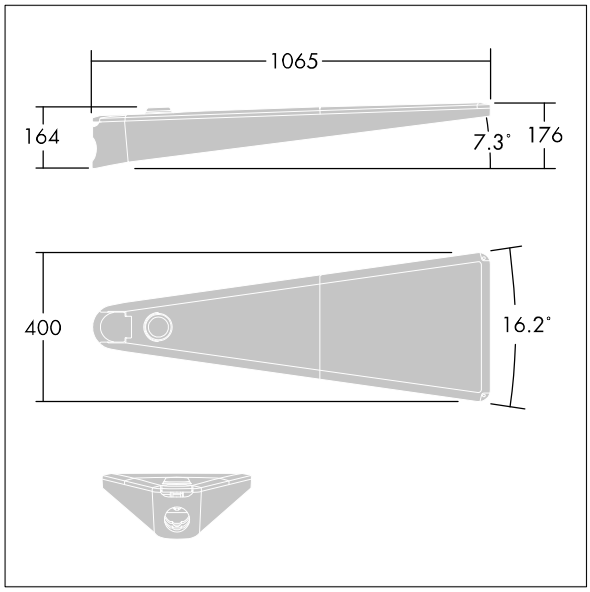

TLG_URBA_M_LD1.wmf

This product contains light sources of energy efficiency class D.

All values marked with an * are rated values. Thorn uses tried and tested components from leading suppliers, however there may be isolated instances of technology-related failures of individual LEDs during the rated product lifetime. International standards set the tolerance in initial flux and connected load at ±10%. Unless stated otherwise, the values apply to an ambient temperature of 25°C.

Thorn Lighting is constantly developing and improving its products. The right is reserved to change specifications without prior notification or public announcement.
© Thorn Lighting