96270899 <URBA COL 4M AL D60 BK

4m cylindrical column, flange plate mounted. Top diameter 62mm, with step. Material: aluminium. Finish: powder coated black, other colours available on request. Ground bolts are not included but are available on request.

Refer to the installation instructions to check the compatibility with lighting fixtures and sites.

Please note: Delivery charges will apply to this item.

Height: 4m
Weight: 40 kg

TLG_URBA_F_COLBK.jpg

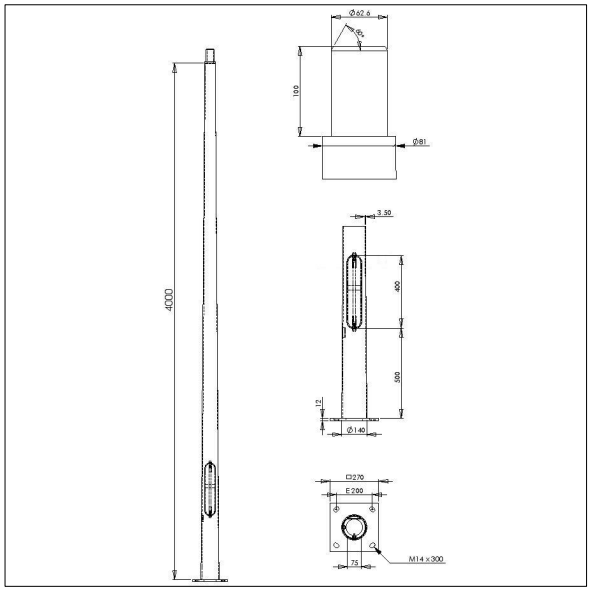

TLG_URBA_M_COL460.wmf

All values marked with an * are rated values. Unless stated otherwise, the values apply to an ambient temperature of 25°C.
Thorn Lighting is constantly developing and improving its products. The right is reserved to change specifications without prior notification or public announcement.
© Thorn Lighting