96627347 <PRIM L2 LED12000-840 NB HFIX SET

2000 mm length of trunking, for direct ceiling fixing or suspended mounting on wire or chains, with 12 000 lm LED luminaire with narrow distribution. LED converter Slave luminaire for DALI control (DALI only). Roll-formed sheet steel in Polyester lacquered finish. Class I electrical, IP20. Standard module, with mechanical connector. Supplied with plug-in, 7-pole through wiring. Complete with side panels. Complete with 4000K LED.

Dimensions: 2000 x 68 x 93 mm
Luminaire input power: 84 W
Luminaire luminous flux: 12100 lm
Luminaire efficacy: 144 lm/W
Weight: 5.6 kg

TLG_PMM5_F_LEDPDB.jpg

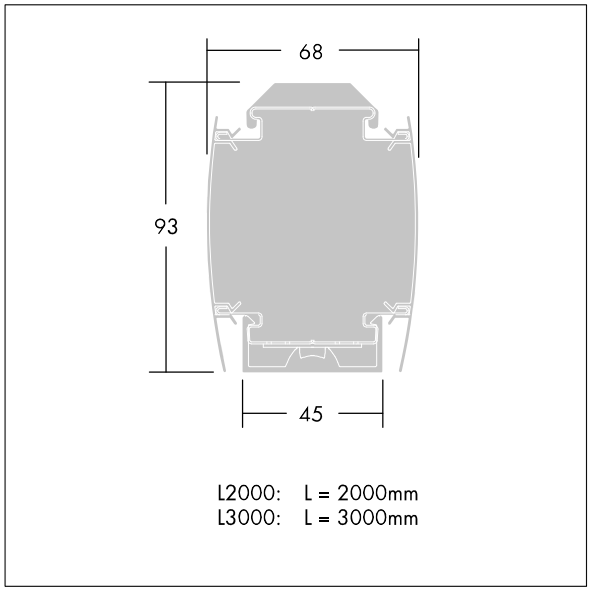

TLG_PMML_M_LED_bestueckt.wmf

This product contains a light source of energy efficiency class E.

All values marked with an * are rated values. Thorn uses tried and tested components from leading suppliers, however there may be isolated instances of technology-related failures of individual LEDs during the rated product lifetime. International standards set the tolerance in initial flux and connected load at ±10%. Unless stated otherwise, the values apply to an ambient temperature of 25°C.

Thorn Lighting is constantly developing and improving its products. The right is reserved to change specifications without prior notification or public announcement.
© Thorn Lighting

96627347 <PRIM L2 LED12000-840 NB HFIX SET

Thorn Lighting is constantly developing and improving its products. The right is reserved to change specifications without prior notification or public announcement.
© Thorn Lighting