E/Fact

96271559 <EFACT C00 1L35 ACC 7D 832 AL SF

E/Fact

A small square ground recessed luminaire. 1 LED(s) driven at 350mA by integral driver, 7° beam angle for walkover guidance applications. Tilting angle adjustment of ±10°. Body: die-cast aluminium with powdered paint finish. Frame: painted aluminium, 2mm thick. Front glass: semi-frosted toughened sodic glass, 8mm thick, surface temperature complies with EN60598-2-13. Recessing box: polypropylene. Rated IP67, class I electrical. Maximum static load 1000kg. Complete with 3200K LED

Dimensions: 85 x 85 x 103 mm
Luminaire input power: 3 W
Luminaire luminous flux: 87 lm
Luminaire efficacy: 29 lm/W
Weight: 0.72 kg

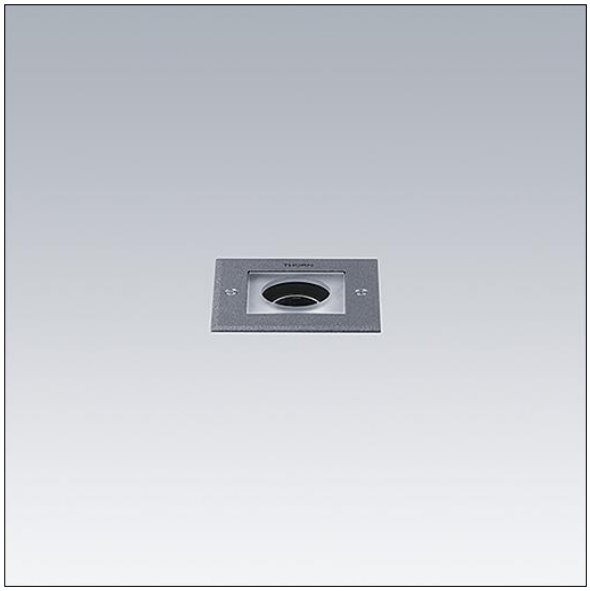

TLG_EFCT_F_C001LEDALSF.jpg

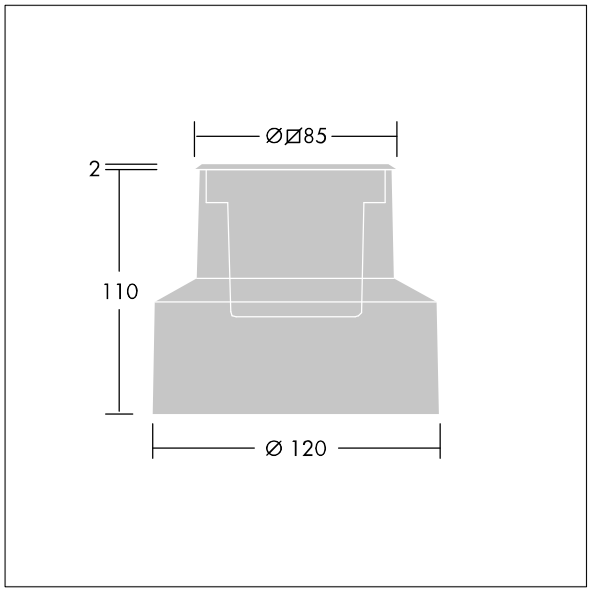

TLG_EFCT_M_2015LD00RSAL.wmf

This product contains a light source of energy efficiency class E.

All values marked with an * are rated values. Thorn uses tried and tested components from leading suppliers, however there may be isolated instances of technology-related failures of individual LEDs during the rated product lifetime. International standards set the tolerance in initial flux and connected load at ±10%. Unless stated otherwise, the values apply to an ambient temperature of 25°C.

Thorn Lighting is constantly developing and improving its products. The right is reserved to change specifications without prior notification or public announcement.
© Thorn Lighting