Katona

96629366 KAT RD 1400-840 HF

THORN

Katona

A very slim, round functional LED luminaire. Fixed output LED driver. Body: polycarbonate. Diffuser: opal polycarbonate. Class II electrical, IP65, IK10. Complete with 4000K LED. Suitable for direct mounting to wall or ceiling. Loop-in, loop-out is possible for cables up to 2. 5mm². BESA compatible.

Dimensions: Ø307 x 58 mm
Luminaire input power: 11.7 W
Luminaire luminous flux: 1400 lm
Luminaire efficacy: 120 lm/W
Weight: 0.94 kg

TLG_KATO_F_RD_PDB.jpg

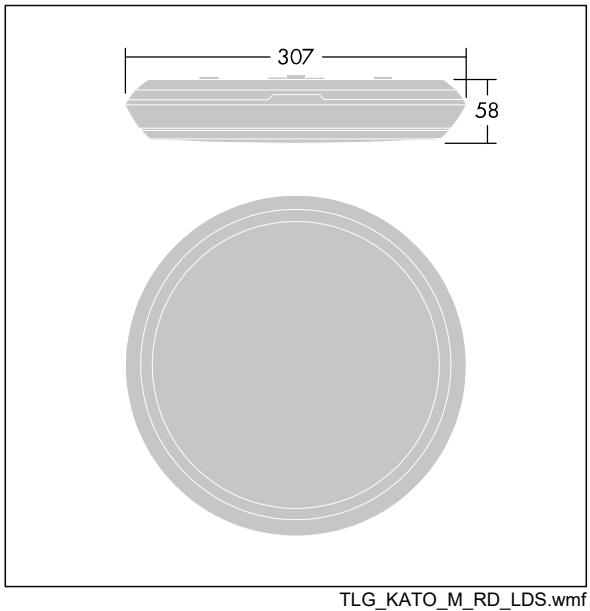

TLG_KATO_M_RD_LDS.wmf

This product contains a light source of energy efficiency class C.

All values marked with an * are rated values. Thorn uses tried and tested components from leading suppliers, however there may be isolated instances of technology-related failures of individual LEDs during the rated product lifetime. International standards set the tolerance in initial flux and connected load at ±10%. Unless stated otherwise, the values apply to an ambient temperature of 25°C.

Thorn Lighting is constantly developing and improving its products. The right is reserved to change specifications without prior notification or public announcement.
© Thorn Lighting

Katona

96629366 KAT RD 1400-840 HF

Thorn Lighting is constantly developing and improving its products. The right is reserved to change specifications without prior notification or public announcement.
© Thorn Lighting