# Glacier II

## 96632399 GLAC2 L LED3 3000-840 HFIX EC BK AL BK

### Glacier II

A modern and efficient LED pendant luminaire.  DALI dimmable control gear suitable for central battery emergency installations. Housing: die-cast aluminium with satin black finish. Reflector: black aluminium with easy bayonet mount connection to housing. Class I electrical, IP20. Suspended via adjustable quick-lock 2.5m single wire suspension (supplied). Pre-wired with braided, flame retardent silicone cable, 5 x 0.75mm². Complete with 4000K LED

Dimensions: Ø340/140 x 485 mm
Luminaire input power: 27 W
Weight: 4.8 kg

TLG_GLCL_F_L_BKALBK.jpg

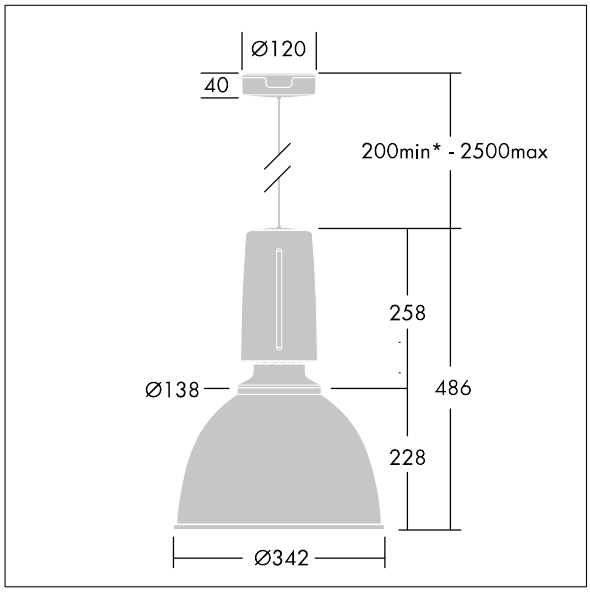


TLG_GLCR_M_LED.wmf

This product contains a light source of energy efficiency class D.

All values marked with an * are rated values. Thorn uses tried and tested components from leading suppliers, however there may be isolated instances of technology-related failures of individual LEDs during the rated product lifetime.  International standards set the tolerance in initial flux and connected load at ±10%. Unless stated otherwise, the values apply to an ambient temperature of 25°C.

Thorn Lighting is constantly developing and improving its products. The right is reserved to change specifications without prior notification or public announcement.
© Thorn Lighting

# Glacier II

## 96632399 GLAC2 L LED3 3000-840 HFIX EC BK AL BK

Thorn Lighting is constantly developing and improving its products. The right is reserved to change specifications without prior notification or public announcement.
© Thorn Lighting