Olsys Street

96633547 OLSYS2 36L70 740 CL2 BP8 STR

THORN

Olsys Street

An LED lantern with street distribution for urban street lighting applications. Electronic, bi-power control gear. Class II electrical, IP66, IK08. Body: die-cast aluminium (AS9U), powder coated silver-grey (RAL 9006). Enclosure: tempered glass. Optics: aluminium. Supplied in one box, ready to install. Mounting attachments to be ordered separately. Equipped with 50% power reduction circuit, effective 3 hours before and 5 hours after a calculated midnight. Complete with 4000K LED

ambient temperature: -30°C to +50°C

Dimensions: 655 x 337 x 76 mm
Luminaire input power: 78.5 W
Weight: 8.75 kg
Scx: 0.17 m²

TLG_OSYS_F_1MPTPDB.jpg

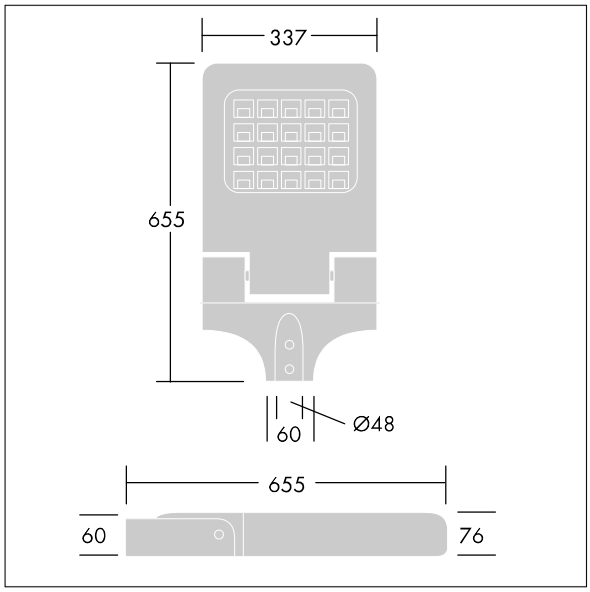

TLG_OSYS_M_STR2.wmf

This product contains a light source of energy efficiency class D.

All values marked with an * are rated values. Thorn uses tried and tested components from leading suppliers, however there may be isolated instances of technology-related failures of individual LEDs during the rated product lifetime. International standards set the tolerance in initial flux and connected load at ±10%. Unless stated otherwise, the values apply to an ambient temperature of 25°C.

Thorn Lighting is constantly developing and improving its products. The right is reserved to change specifications without prior notification or public announcement.
© Thorn Lighting