Urba

96270894 <URBA 2XBRA 0,45 MTP TOP76 D60 ANT

Urba

Double galvanised steel post top bracket. 2 x 450mm arm.
Painted dark grey.

TLG_URBA_F_DBLBRKT450GY.jpg

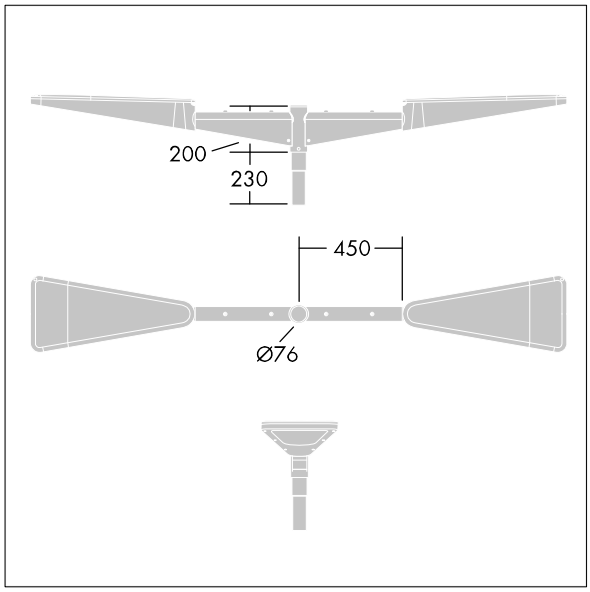

TLG_URBA_M_600_C2.wmf

All values marked with an * are rated values. Unless stated otherwise, the values apply to an ambient temperature of 25°C.

Thorn Lighting is constantly developing and improving its products. The right is reserved to change specifications without prior notification or public announcement.
© Thorn Lighting