Thor

96643924 TR 72L50-740 RWT BP CL2 OP W9 L60E

Thor

A large size, smart urban LED lantern with 72 LEDs driven at 500mA with Wet Road optic and UV stabilised polycarbonate dome with opal finish. Class II electrical, IP66, IK08. Body, bracket and ring: die-cast aluminium (AS12U, LM6 equivalent, EN AC-44300) treated against corrosion, powder coated anthracite (close to RAL7043). Enclosure: 4mm toughened flat glass. Screws and closing set: stainless steel. Pre-wired with 9m cable. Side entry mounting to Ø60mm spigot, tilt 0°, adjustable from -15° to +10°. Equipped with power reduction circuit, effective 3 hours before and 5 hours after a calculated midnight. Complete with 4000K LED.

Dimensions: Ø577 x 155 mm
Luminaire input power: 115 W
Luminaire luminous flux: 15229 lm
Luminaire efficacy: 132 lm/W
Weight: 14.6 kg
Scx: 0.044 m²

TLG_THRL_F_MLEOP0.jpg

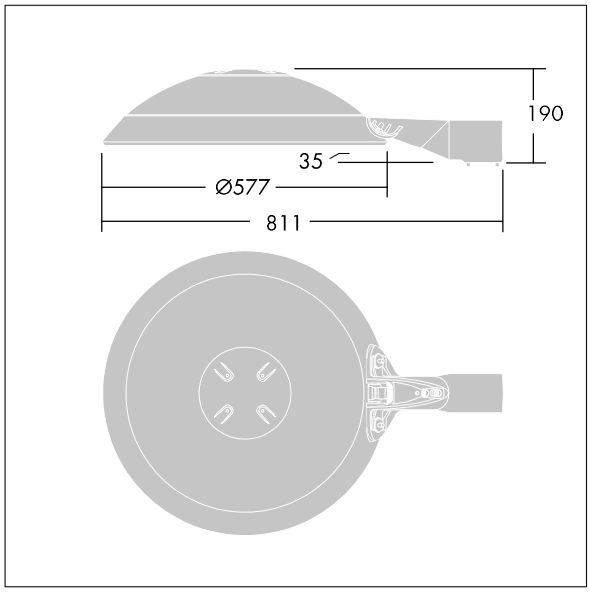

TLG_THOR_M_BRK.wmf

This product contains light sources of energy efficiency class E.

All values marked with an * are rated values. Thorn uses tried and tested components from leading suppliers, however there may be isolated instances of technology-related failures of individual LEDs during the rated product lifetime. International standards set the tolerance in initial flux and connected load at ±10%. Unless stated otherwise, the values apply to an ambient temperature of 25°C.

Thorn Lighting is constantly developing and improving its products. The right is reserved to change specifications without prior notification or public announcement.
© Thorn Lighting

Thor

96643924 TR 72L50-740 RWT BP CL2 OP W9 L60E

Thorn Lighting is constantly developing and improving its products. The right is reserved to change specifications without prior notification or public announcement.
© Thorn Lighting