Aquaforce Pro

96630973 AQFPRO S LED4300-840 PC MB HF QC3

THORN

Aquaforce Pro

An IP66, dust and moisture resistant LED luminaire. Electronic, fixed output control gear. With medium beam distribution. Class I electrical. Canopy: light grey polycarbonate. Diffuser: high transmission opal polycarbonate with refraction prisms. Patented snap-on mechanism EasyClick for clipless mounting of diffuser. For surface or suspended mounting. Quick-fix brackets supplied for surface mounting. Suitable for ceiling or wall (both vertically and horizontally). Approved for indoor use or in canopied outdoor areas (see installation instructions). Mounting kits for conduit, chain suspension and catenary suspension are available as accessories. Suitable for through wiring with H05VV or NYM cable (rated 10A). Equipped with quick fit electrical connection. ambient temperature: -20°C to +35°C. Complete with 4000K LED..

Note: please contact your consultant if you are planning to use the luminaire in environments with chemical pollutants, high or condensing humidity and major variations in temperature.

Dimensions: 1100 x 92 x 90 mm
Luminaire input power: 30.2 W
Luminaire luminous flux: 4400 lm
Luminaire efficacy: 146 lm/W
Weight: 1.73 kg

TLG_AQUP_F_PDB_QC.jpg

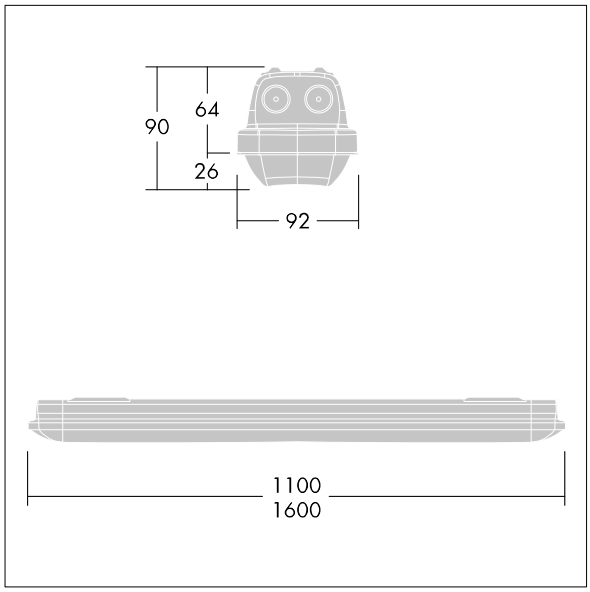

TLG_AQUP_M_LD1.wmf

All values marked with an * are rated values. Thorn uses tried and tested components from leading suppliers, however there may be isolated instances of technology-related failures of individual LEDs during the rated product lifetime. International standards set the tolerance in initial flux and connected load at ±10%. Unless stated otherwise, the values apply to an ambient temperature of 25°C.

Thorn Lighting is constantly developing and improving its products. The right is reserved to change specifications without prior notification or public announcement.
© Thorn Lighting

Aquaforce Pro

96630973 AQFPRO S LED4300-840 PC MB HF QC3

Thorn Lighting is constantly developing and improving its products. The right is reserved to change specifications without prior notification or public announcement.
© Thorn Lighting