R2L2

96630724 RX 12L70-740 NR BS 3550 CL2 ANT

THORN

R2L2

An extra small size LED road lighting lantern with 12 LEDs driven at 700mA with Narrow Road optic. Programmable LED driver. Class II electrical, IP66, IK09. Housing: die-cast aluminium (EN AC-44300), powder coated textured anthracite (close to RAL7043). Enclosure: tempered flat glass. Screws: stainless steel, Ecolubric® treated. Post top (Ø60/76mm, tilted 0°/5°/10°) or lateral (Ø34/42/49/60mm, tilted 0°/-5°/-10°/-15°) mounting. For lateral mounting to Ø34/42mm spigots an adaptor (59005840 R2L2 MA34/42 NPA) should be ordered separately. Equipped with 50% power reduction circuit, effective 3 hours before and 5 hours after a calculated midnight. It can be deactivated at installation with an easily accessible internal switch. Complete with 4000K LED.

Dimensions: 598 x 232 x 149 mm
Luminaire input power: 26.6 W
Luminaire luminous flux: 4026 lm
Luminaire efficacy: 151 lm/W
Weight: 7.4 kg
Scx: 0.05 m²

TLG_R2L2_F_XS_MTP_PDBANT.jpg

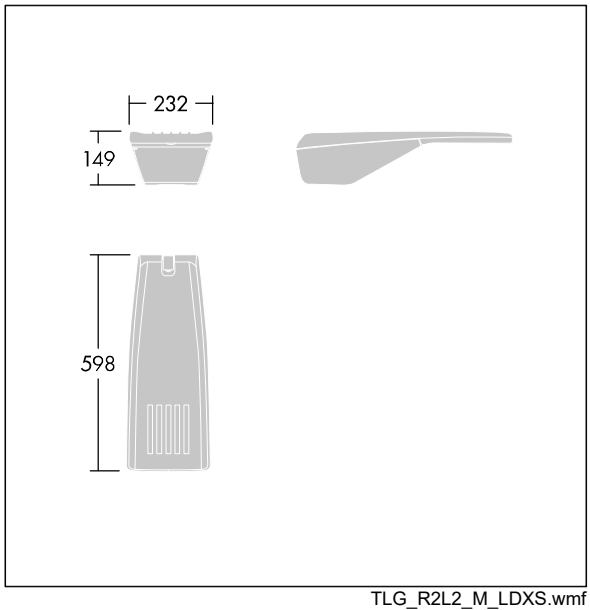

TLG_R2L2_M_LDXS.wmf

This product contains a light source of energy efficiency class D.

All values marked with an * are rated values. Thorn uses tried and tested components from leading suppliers, however there may be isolated instances of technology-related failures of individual LEDs during the rated product lifetime. International standards set the tolerance in initial flux and connected load at ±10%. Unless stated otherwise, the values apply to an ambient temperature of 25°C.

Thorn Lighting is constantly developing and improving its products. The right is reserved to change specifications without prior notification or public announcement.
© Thorn Lighting