EP 445

96631754 EP445 12L70-827 ND-A BPS CL2 MSU

THORN

EP 445

A 19th Century style lantern with 12 LEDs with switchable drive current and Narrow Road optic. Equipped with power reduction circuit, profile selected by rotary switch. Class II electrical, IP66, IK08. Body: die-cast aluminium, painted black (close to RAL9005) textured. Enclosure: 4mm thick extra clear glass. Complete with 2700K LED

Dimensions: 436 x 436 x 725 mm
Luminaire input power: 27.5 W
Weight: 8.7 kg
Scx: 0.19 m²

TLG_EP44_F_MSU.jpg

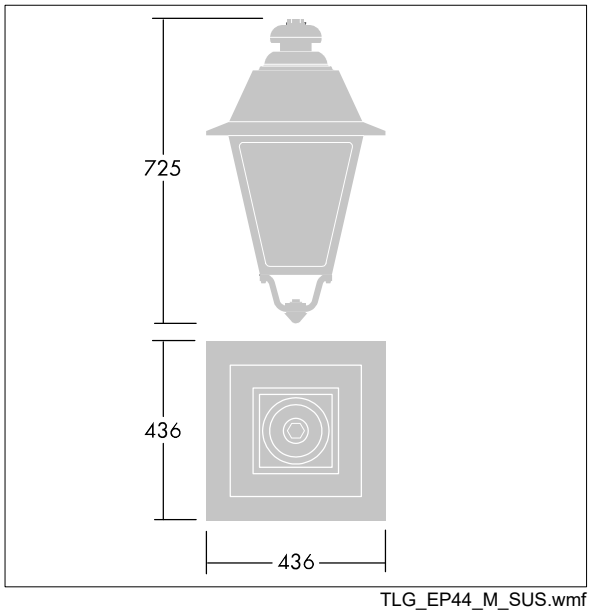

TLG_EP44_M_SUS.wmf

This product contains a light source of energy efficiency class E.

All values marked with an * are rated values. Thorn uses tried and tested components from leading suppliers, however there may be isolated instances of technology-related failures of individual LEDs during the rated product lifetime. International standards set the tolerance in initial flux and connected load at ±10%. Unless stated otherwise, the values apply to an ambient temperature of 25°C.

Thorn Lighting is constantly developing and improving its products. The right is reserved to change specifications without prior notification or public announcement.
© Thorn Lighting

EP 445

96631754 EP445 12L70-827 ND-A BPS CL2 MSU

Thorn Lighting is constantly developing and improving its products. The right is reserved to change specifications without prior notification or public announcement.
© Thorn Lighting