Glacier II

96632201 GLAC2 L LED3 3500-840 BC E3 GY GL PR

Glacier II

A modern and efficient LED pendant luminaire. Electronic, Wireless connection via app with Bluetooth® 4.x - basicDIM Wireless with 3 hour, manual test, emergency lighting circuit. Housing: die-cast aluminium with satin grey finish. Reflector: prismatic glass with easy bayonet mount connection to housing. Class I electrical, IP20. Suspended via adjustable quick-lock 2.5m single wire suspension (supplied). Pre-wired with braided, flame retardent silicone cable, 6 x 0.75mm². Complete with 4000K LED

Radio definition: basicDIM Wireless - Bluetooth® 4.x,
Radio frequency: 2.4...2.483 GHz, Radio power: +4 dBm.

Dimensions: Ø340/140 x 485 mm
Luminaire input power: 27 W
Weight: 7.1 kg

TLG_GLCL_F_L_GYGLPR.jpg

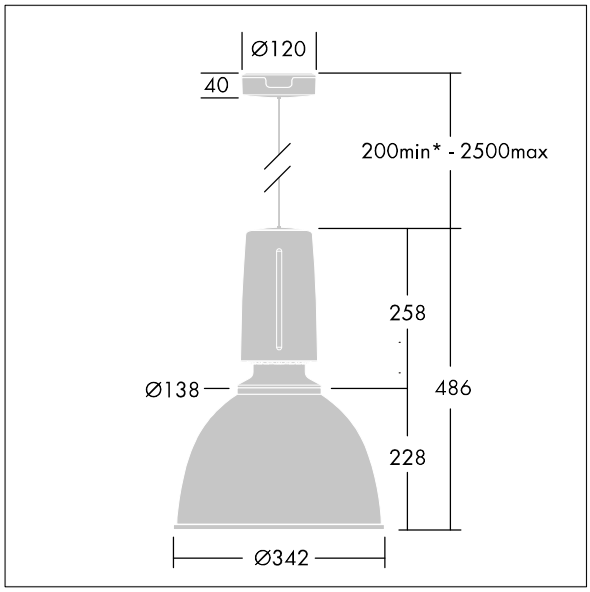

TLG_GLCR_M_LED.wmf

This product contains a light source of energy efficiency class D.

All values marked with an * are rated values. Thorn uses tried and tested components from leading suppliers, however there may be isolated instances of technology-related failures of individual LEDs during the rated product lifetime. International standards set the tolerance in initial flux and connected load at ±10%. Unless stated otherwise, the values apply to an ambient temperature of 25°C.

Thorn Lighting is constantly developing and improving its products. The right is reserved to change specifications without prior notification or public announcement.
© Thorn Lighting

Glacier II

96632201 GLAC2 L LED3 3500-840 BC E3 GY GL PR

Thorn Lighting is constantly developing and improving its products. The right is reserved to change specifications without prior notification or public announcement.
© Thorn Lighting